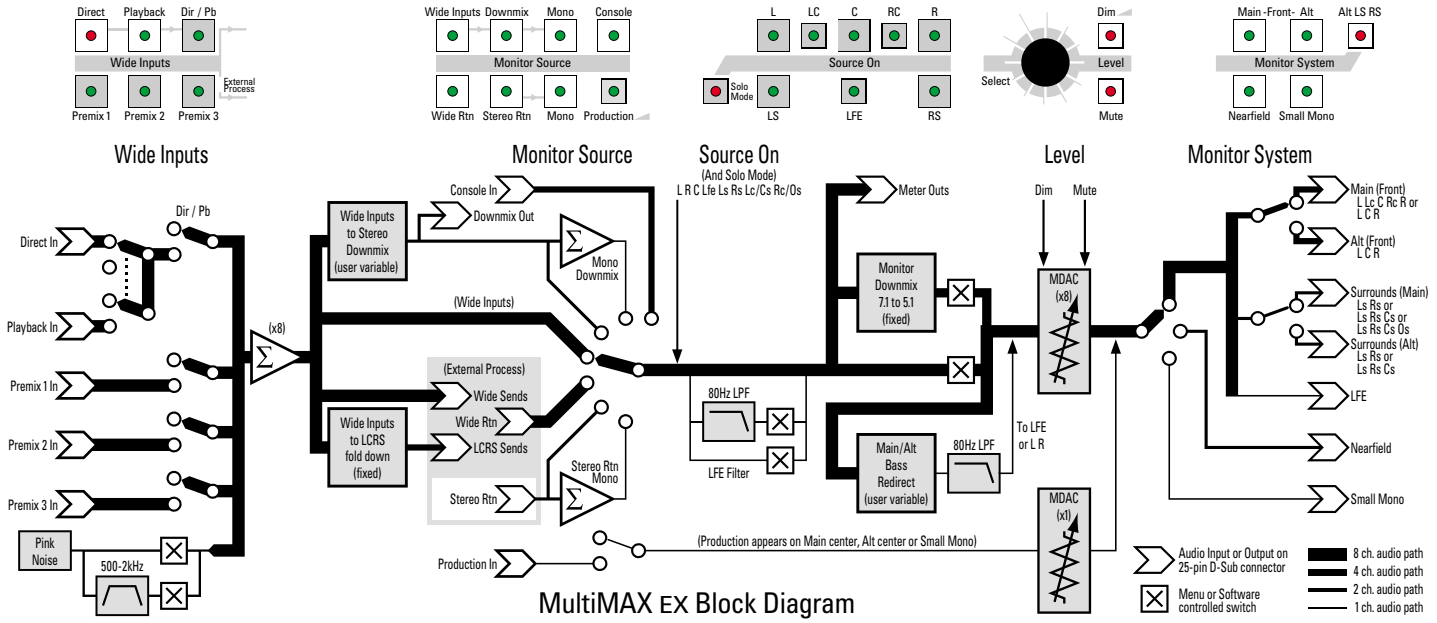

MultiMAX EX Block Diagram